DART AEROSPACE APICAL INDUSTRIES, INC. dba DART AEROSPACE	ENGINEERING CHANGE NOTICE NO. 05940				SHEET 1 OF 4
	DWG NO. 649.4700	REV: E	PREPARED BY M. BELLAVANCE	DATE: 03/08/18	EFFECT ON DWG ☒ INC. ☐ UNINC.
	DWG TITLE: A119 CABLE CUTTERS KIT				
	APPROVED BY: ENGR	MFG	QC Paul Wood	EFF. NEXT ORDER	
TRANSACTION CODES (TC): A-ADD C-CREATE R-REVISE D-DELETE	REASON: REVISED BOM & ADDED DELTA NOTE 6				ECR: 18-013

ACTION ITEM:
1. SEND UPDATED DRAWINGS TO HAWKESBURY.
2. UPDATE TEMPLATE.

SHEET 1, NOTES WAS:

NOTES:

1. APPLY F/N 62 TO FAYING SURFACES.
2. AFTER INSTALLATION, APPLY F/N 63 A/R TO FILL GAPS AND FILLET EDGES
3. MATCH DRILL HOLE ON TAB OF F/N 13 TO FIT RIVET F/N 45
4. REQUIRED QTY
   F/N 12: 1
   F/N 15: 2
   F/N 17: 1
   INSTALL EXTRA AS NEEDED
5. INSTALL ONLY IF REQUIRED

SHEET 5, ZONE A4 WAS:

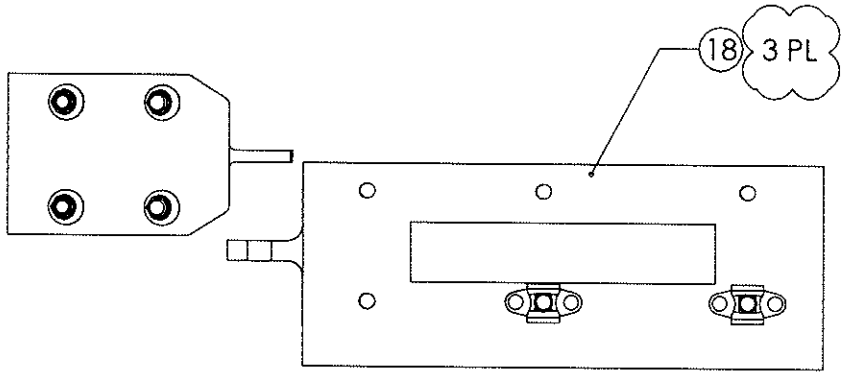

SHEET 1, BOM IS:

F/N	TC	PART NUMBER	QTY (4701)		DESCRIPTION	MATERIAL	SPECIFICATIONS
80	A	NAS1330S08KB321	8		RIVNUT	NAS1330S08KB321	
79	A	601.1953	2		SCREW	MS27039-1-12	
78	A	649.5113	2		WIPER DEFLECTOR SHIM		6
75	R	601.4084	8		RIVNUT	NAS1330S08KB106	
68	R	649.4820	1		SHIM		5
53	R	601.2765	26		SCREW	MS27039-0819	
48	R	MS24694S62	2		SCREW	MS24694S62	
42	R	601.1119	22		RIVET	MS20470AD4-5	
28	R	601.2481	8		CHERRY RIVET	CR3213-5-4	
18	R	649.4815	4		SHIM		

DOCUMENTS EFFECTED: ☐ PATTERN ☐ MDL ☒ INSTALL INSTRUCTIONS ☒ ICA ☐ FMS ☒ BOM	CHANGE CATEGORY ☐ MAJOR ☒ MINOR	DER REVIEW REQUIRED ☐ YES ☒ NO	

SHEET 2, ZONE A1 WAS:

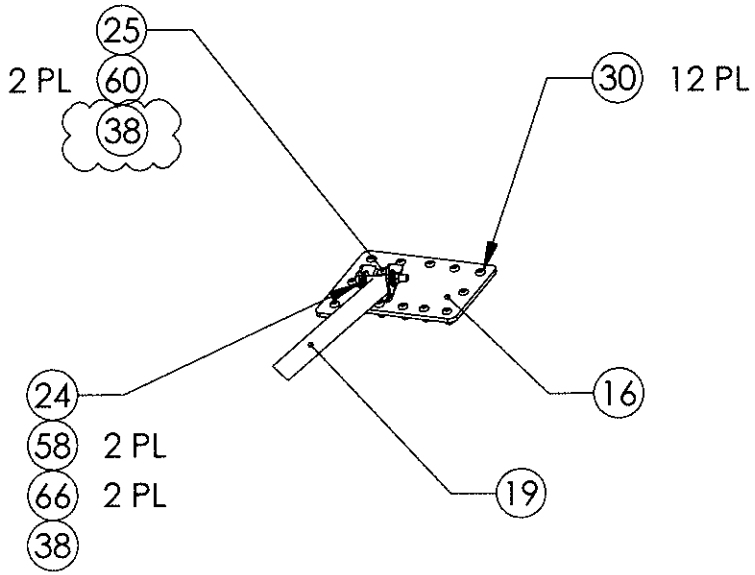

SHEET 2, ZONE C7 WAS:

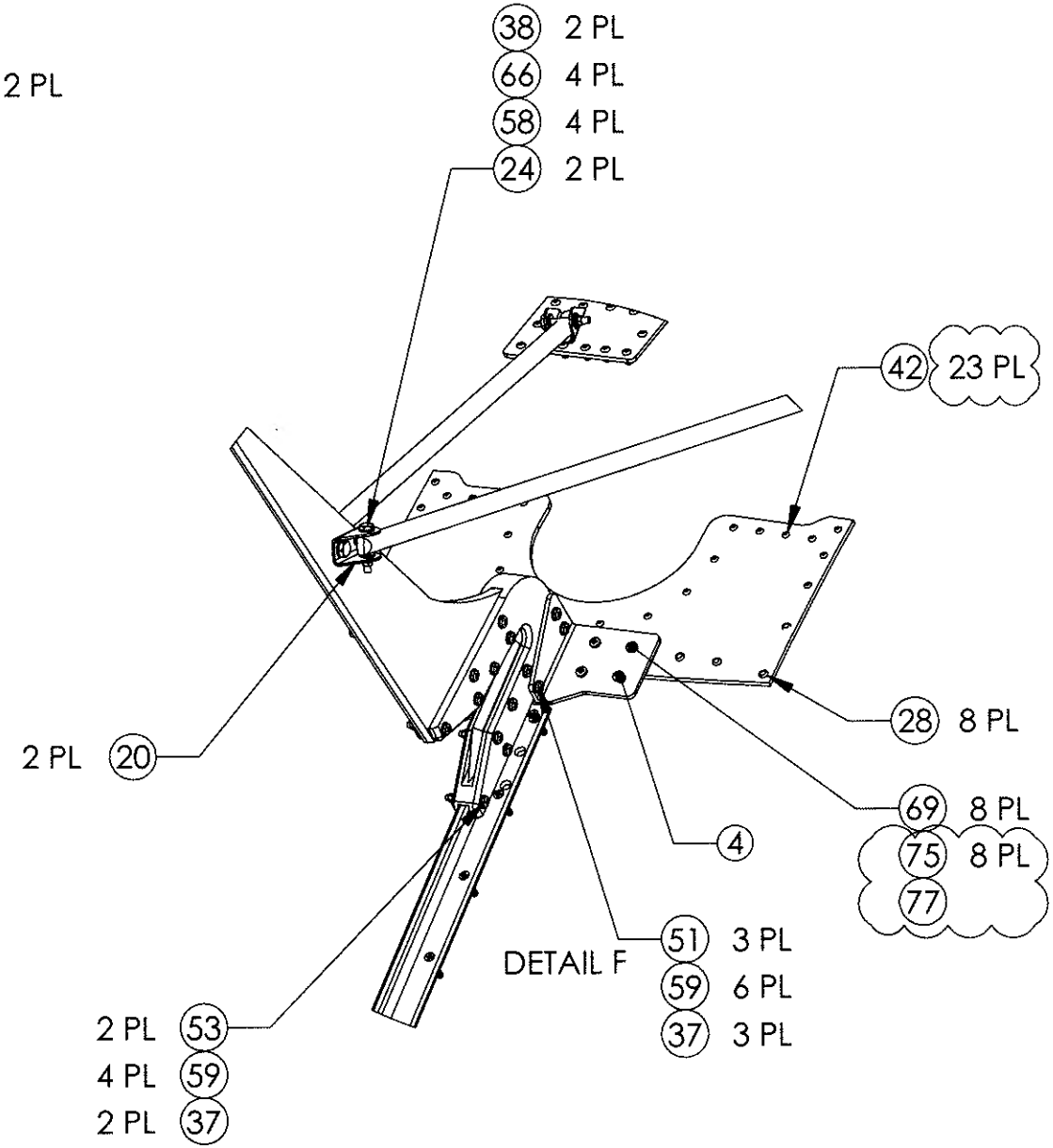

SHEET 3, ZONE B4 WAS:

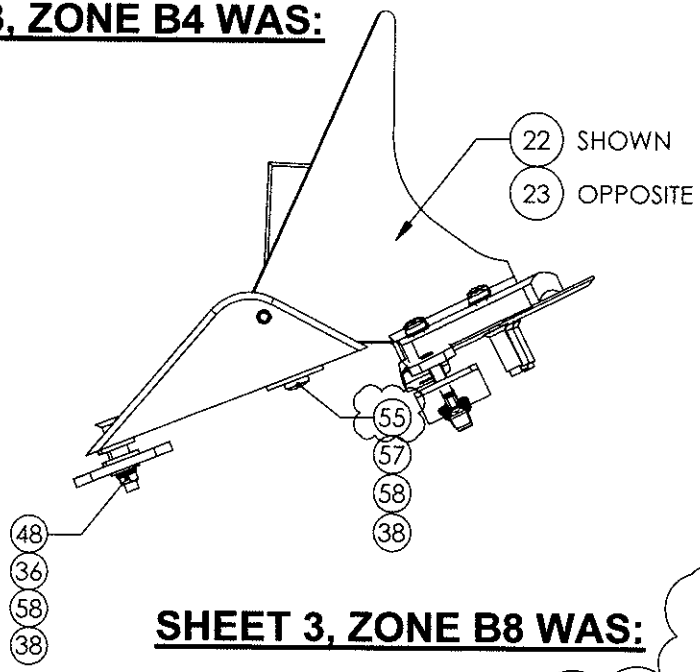

SHEET 3, ZONE C5 WAS:

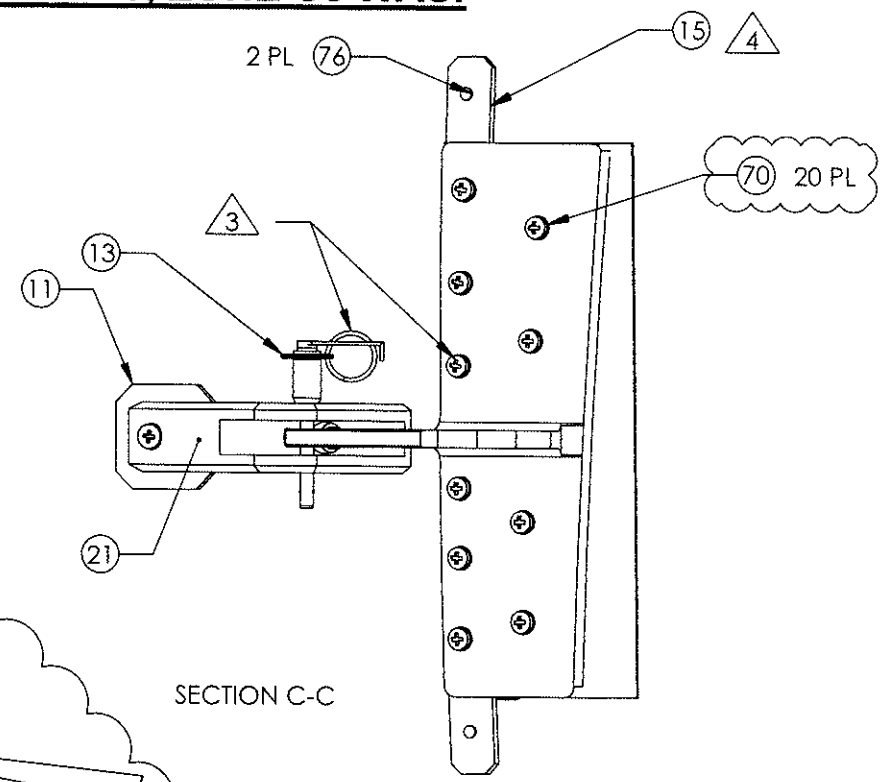

SHEET 3, ZONE B8 WAS:

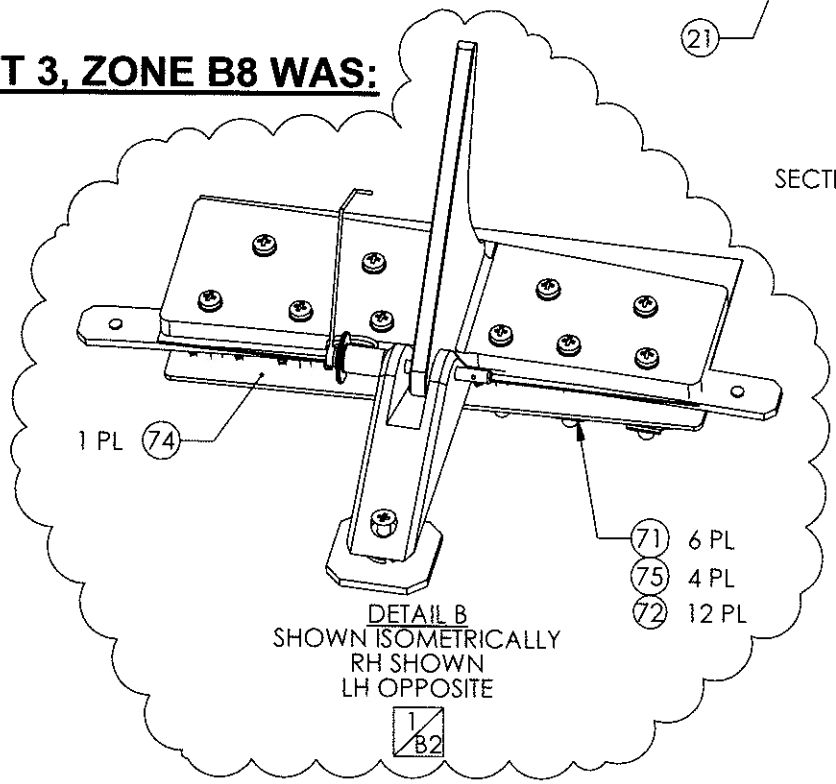

SHEET 4, ZONE A1 WAS:

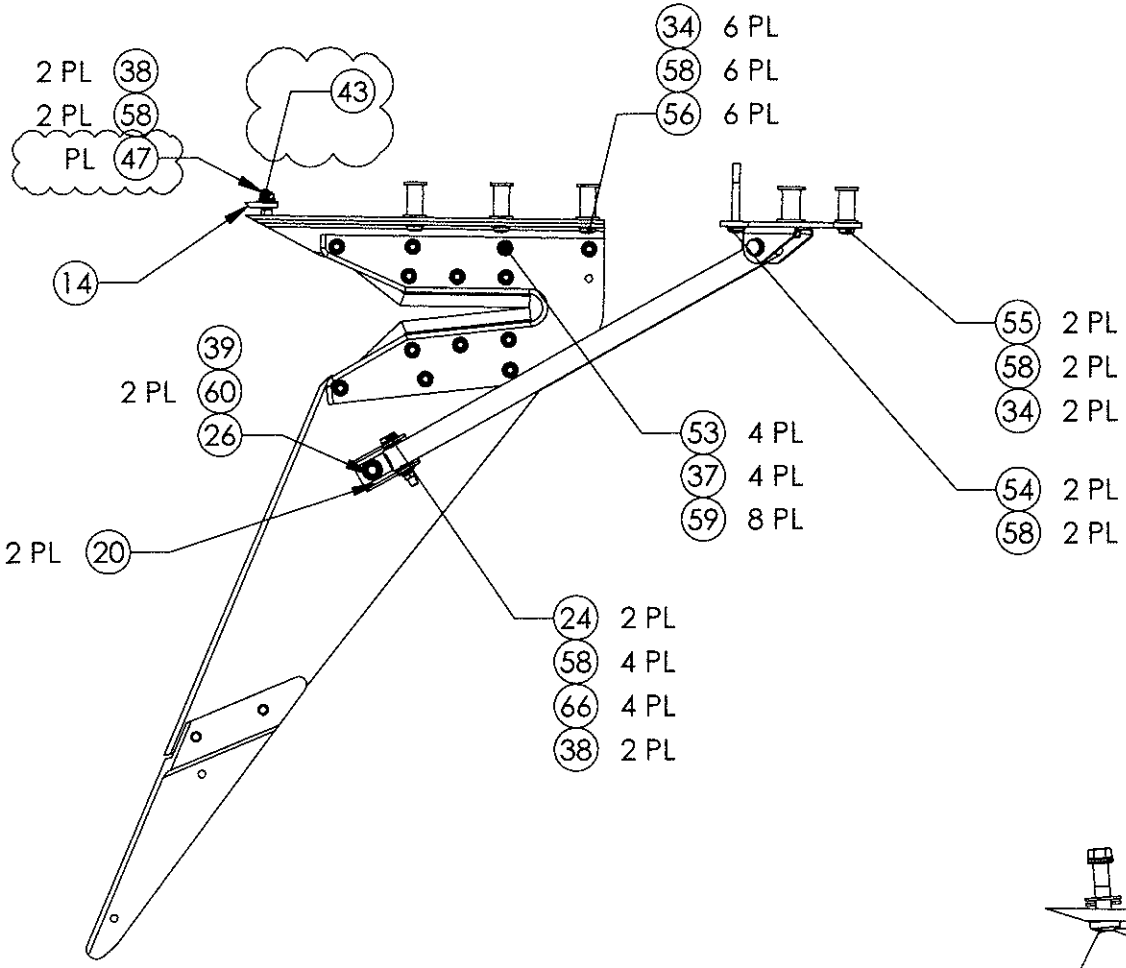
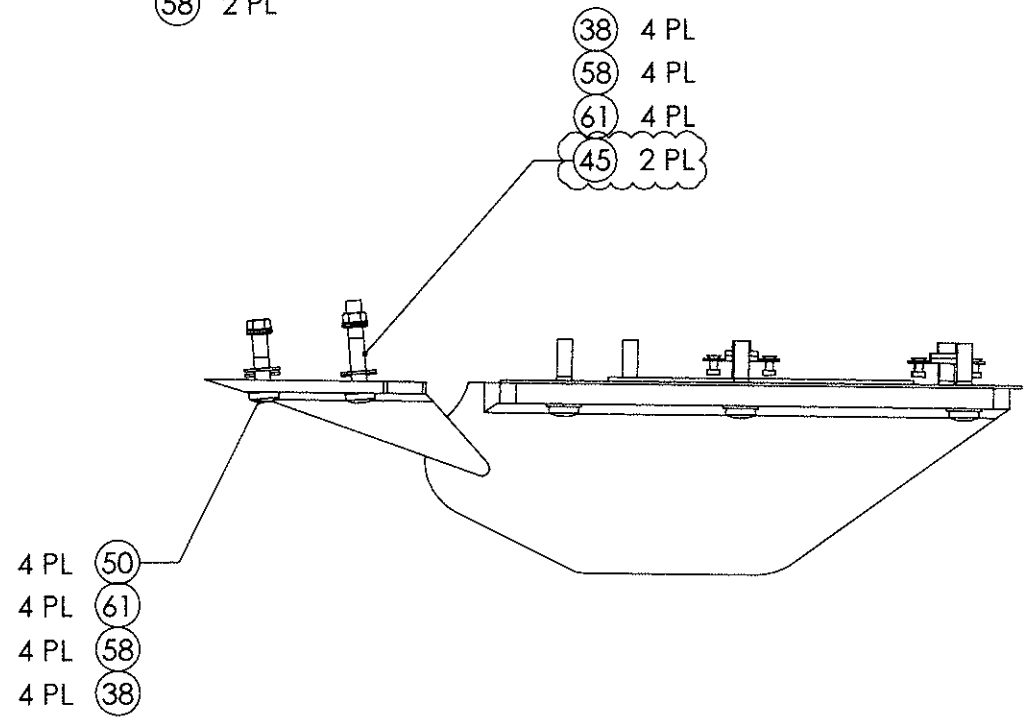
SHEET 5, ZONE C7 WAS: